CHAMBERLAIN
SENTEX

EM3000
Access Control System

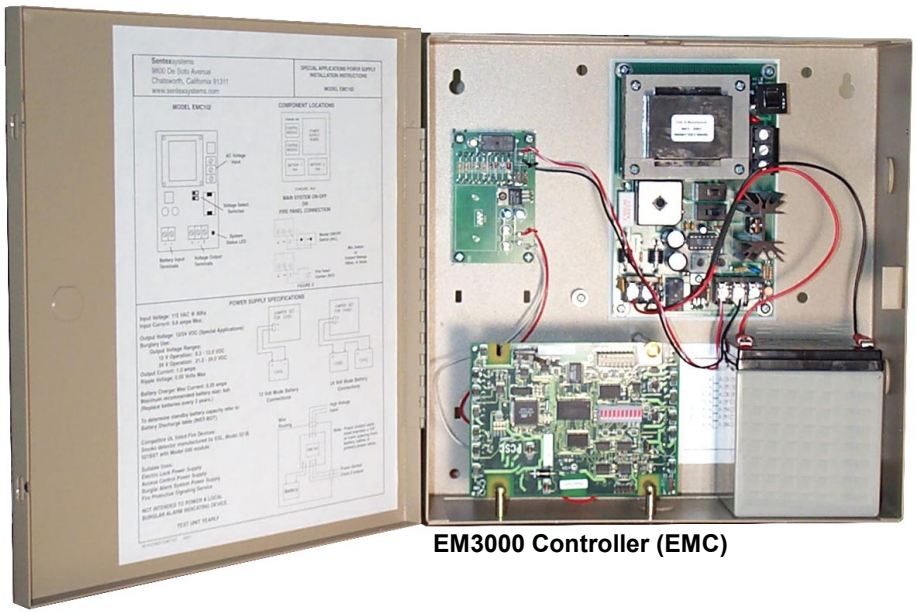

EM3000 Controller (EMC)

Installation Instructions

Doc 6001536, Rev C

Contents

Introduction

This manual explains how to install the EM3000 components (and connect a unit to a computer) to create an access control system. This manual is divided into seven sections, referred to as steps:

Step 1: Lists those components that are supplied and not supplied. Refer to page 4.

Step 2: Provides EM3000 specification information such as system features, capacities, and cable requirements and maximum lengths. Refer to page 5.

Step 3: Defines “Access Control” and explains how to plan for your system installation. Refer to page 6.

Step 4: Identifies the specific connections for each component. Refer to page 10.

Step 5: Outlines the proper sequence of events for powering up the system. Refer to page 21.

Step 6: Explains what you need to know about adding multiple EMCs and components to the system. Refer to page 25.

Step 7: Lists various trouble-shooting tips and FAQs, useful if the system is not performing properly upon start-up. Refer to page 27.

Step 1: Unpacking the EM3000

Every installation will have at least (1) one EM3000 System Kit (SN7000410) and one (1) Software/Communications Kit (SN7050002). For multi-EMC systems or existing installations, the system kit may be ordered separately. Inspect each kit for missing items or damage. *Keep ALL packing material for protection in case you have to return the unit for any reason.*

Parts Supplied

As you unpack your kits, ensure that you have all the supplied parts for each kit. If any parts are missing, contact Sentex Systems (see last page for contact information).

PART DESCRIPTION	PART #	QTY.
SYSTEM KIT, MODEL EMC102:	**SN7000410**	**1**
❒ **Cabinet, Power Supply Assy., & Controller Board**	**SN1900410**	**1**
❒ Power Supply Assy., 12VDC, 1A, with cabinet	SN1660035	1
❒ Controller Board (EMC)	SN1110226	1
❒ Battery, Rechargeable, 12V, 4AH	SN5900058	1
❒ **Documentation Package (Installation)**	**SN1700036**	**1**
❒ Installation Instructions (This Manual)	SN6001536	1
❒ Quick Installation Guide	SN6001540	1
❒ Screwdriver	SN4700000	1
SOFTWARE/COMMUNICATIONS KIT:	**SN7000405**	**1**
❒ **RS-485 Kit (Converter, Power Supply, & Instructions)**	**SN8100294**	**1**
❒ RS-485 Converter	SN8100302	1
❒ Power Supply, 12VDC, 100 mA	SN5300093	1
❒ Converter Installation Instructions	SN6001545	1
❒ **Software Kit (EMWin)**	**SN7050002**	**1**
❒ EMWin Software CD	SN6050073	1
❒ EMWin User's Guide	SN6001541	1
❒ Software License Agreement	SN6001509	1

Note: Both the System Kit (SN7000410) and the Software/Communications Kit (SN7000405) may be packaged together.

Parts *Not* Supplied

Required:

- Personal Computer with Windows 98, NT, or 2000 operating system; available COM port.
- Wire and cable, as required for installation.

Optional:

- Electronic Door Strikes or Magnetic Locks.
- Optional: Request to Exit (REX) or Motion Sensors (for exiting a secured door).

Step 2: Review the EM3000 Specifications

EMC FEATURES

2 – Reader Ports (Wiegand format compatible)
2 – Door Strike Relays (Form C Contacts, 2 Amps @ 28VDC max.)
2 – Supervised Door Status Inputs
2 – Supervised Request to Exit Inputs
1 – Enclosure Tamper Switch

SYSTEM CAPACITIES

Cardholder Capacity:	3,000
Time Periods:	32
Holiday Time Periods:	32
Holiday List:	365 Days
History Transactions:	1,000 (at EMC) & 50,000 (in EMWin)
Access Levels:	255

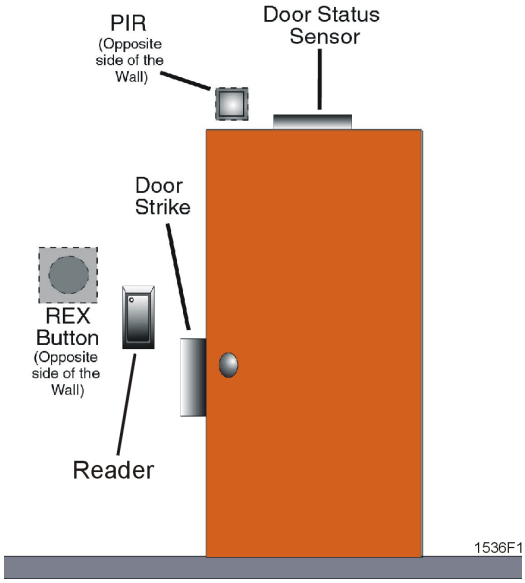

Figure 1

CABLE REQUIREMENTS AND MAXIMUM LENGTHS

Cable Type	Conductors	# of Gauge	Maximum
RS-485 Communications	4	24 AWG 2 twisted pairs/stranded/shielded (Belden 1419A or equiv.)	4000 ft
Reader to EMC	5	22 AWG stranded/shielded	500 ft.
Door Strike to EMC	2	18 AWG stranded	500 ft.
REX (Push Button)	2	22 AWG stranded/shielded	1000 ft.
REX (PIR)	4	22 AWG stranded/shielded	1000 ft.
Door Status Contact	2	22 AWG stranded/shielded	500 ft.

Notes:

- Door strike/lock wire gauge may vary with actual loads of device.
- Distance from PC to last EMC must not exceed 4000 feet.
- Do not exceed more than 32 EMCs in a system.

POWER SUPPLY

Each EMC is powered at 12VDC through the power supply board (connected to a 110VAC power source). The unit also includes a 12VDC, 4AH battery backup.

FACTORY SETTINGS

Each EMC address is factory-set as EMC #1. Communications are set for direct connect (RS-485).

Step 3: Access Control Overview

Electronic access control has revolutionized the world of locksmiths and security. The safety in one's surroundings is essential. With electronic access control, where keys are replaced by electronic cards, a person's access to his/her place of employment/residence can be monitored and controlled. Strangers or guests are limited in their access to a complex and workers or residents can feel safe in knowing that their possessions and work environment are safe from those outside their office or home.

ACCESS CONTROL POINTS

An access control point is usually a door where a person's access is controlled by time, duration and privilege. Is this person allowed to enter this door? At what time(s) of the day and week is this person allowed in or out? How long is this person allowed in through this door before s/he has to come out?

Each EMC can have (2) two access control points per panel, or (2) two doors. Additional units added to the first then increase the number of doors one unit can control and monitor. With two EMCs hooked together, one can monitor four doors; with three EMCs hooked together, one can monitor six doors, and so on.

An access control environment can vary by the number of units in a system and the number of doors that can be monitored. Likewise, the equipment or elements in an access control point may vary due to the level of security needed or the kind of access allowed.

HOW THE SYSTEM WORKS

On the system level, the EM3000 software runs the access control system by communicating instructions from the computer through an RS-485 communications converter to the EMC.

The EMC uses card readers as the access control device to gain entry. Each EMC will manage two readers and the accompanying door sense equipment. Door locks, usually door strikes or magnetic locks, must be powered by a separate low voltage power supply other than that powering the EMC and readers. There is often a door monitoring contact that is used to monitor if the door is closed or open.

Other types of equipment that can be used include:

- **A REX (Request To Exit) device:** A push button that releases the door lock to allow one to exit through the door.
- **A PIR (Passive Infrared Detector):** A detector that has the same function as a REX, but is activated by body temperature. These are important if monitoring the door for alarm activity is used. The REX equipment bypasses the alarm detection software for a period of time to allow free exit. If the REX equipment is not used, and the door is being monitored for alarms, an alarm will be generated every time someone leaves through the door.

Determining Your Needs

Start by deciding the kind of installation you need. Some sites require a tremendously enhanced level of access control, coupled with a security staff. However, most systems require only a fraction of that amount. Which kind of access control system do you need?

Start with a detailed description of what your system needs to accomplish. Every site will differ because of the different objectives and requirements. Some examples are:

- ✓ A store needs to limit shoplifters from leaving through unauthorized exits and to maintain control of the delivery areas, stock rooms, and the store when it's closed.
- ✓ An office building needs to monitor when employees enter and leave departments, to inhibit entrance by unauthorized people, and to control exits.
- ✓ An institution or hospital requires that individuals stay in certain areas and out of other ones during normal operation, but then have the ability to exit the site in case of emergencies.

These are just a few examples. Know what each particular site will require and the level of control that will be required.

Planning Your Site

A detailed plan of your site is probably the most important element of installing a system in a matter of hours versus a matter of days. Before proceeding, be aware of the necessities and limitations of different parts of the system.

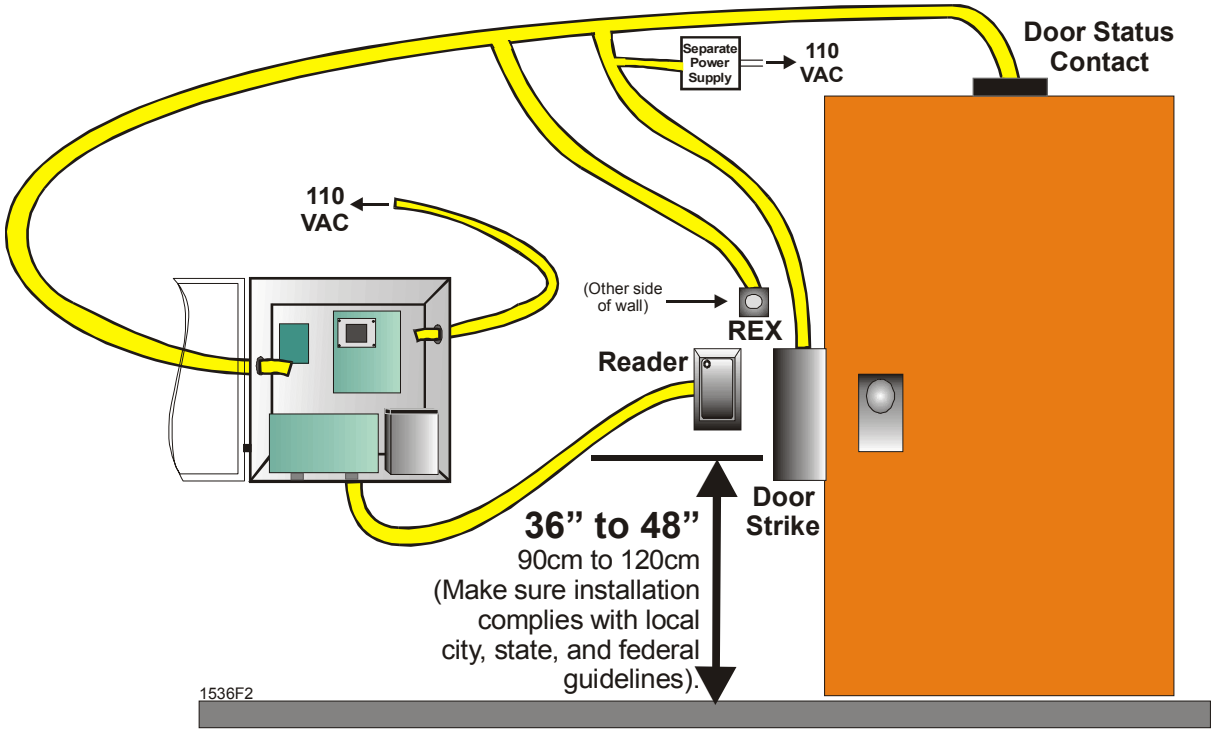

Figure 2: Planning Your Site

SYSTEM SETUP REQUIREMENTS

In every case, an access control system will require the set up and placement of the following:

- **EMC** with its **12VDC Power Supply Board** connected to a 110VAC junction box
- **Personal Computer** that monitors the access control system
- At the access control point, a **Reader** that determines access and a functional **Electronic Door Lock** (with its own dedicated power supply) that allows access through the access point

  Note: If your site must be fully functional during a power failure, door locks must have their own battery back-up.

EMC

The proper placement of the EMC is the most important decision in planning your installation. Find a location that is dry, safe from large temperature variations, and most importantly, secure from the unexpected (e.g., vandalism).

The recommended installation locations are:

1. Telephone/ PBX rooms
2. Computer rooms
3. A wall near one of the Readers (protected area)
4. Above a false ceiling

The EMC is rated for indoor installation only.

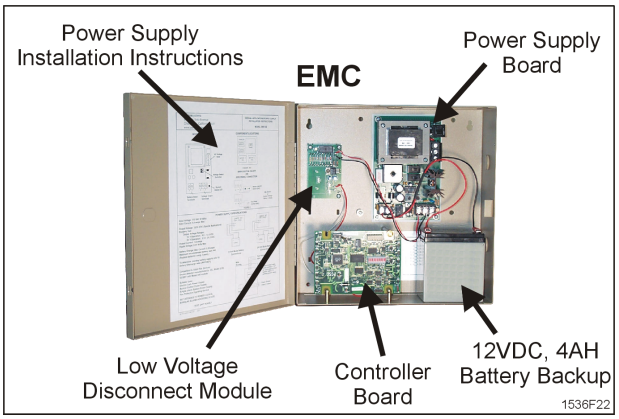

Figure 3: EMC

To keep your EMC working properly, place where:

- the temperature range is between 45-135 F (non-condensing).
- maximum distance from reader(s) to EMC is 500 feet.
- maximum cable distance from the PC (at the RS-485 converter) to the last EMC (if you are using more than one) is 4,000 ft. *If your installation absolutely requires a longer distance, use an RS-485 repeater (such as B&B Electronics-485OP) to amplify the signal. Refer to the repeater's installation instructions for more information.*

You should select an area that is the most convenient for cabling and future maintenance.

Readers

Readers should always be less than 500 feet from the EMC.

Sentex recommends that you place your reader between 36-48” (90cm-120cm) from the floor, though installation should conform to the local, city, county and state installation codes.

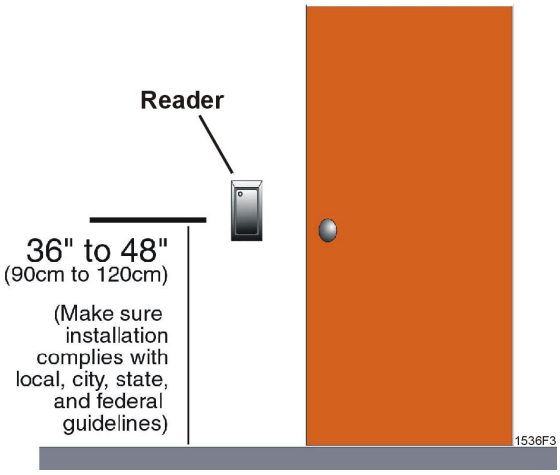

Figure 4: Reader Installation

Door Strike, Door Status Sensors, PIRs and REXs

Like the reader and the door lock, the door status sensor and REX must be positioned within 500 feet of EMC. The door sense is most often placed at the top of the door in order to “sense” the position of the door (open, closed, forced).

The PIR or the REX are placed on the opposite side of the wall and allows people to exit the room or hall. The PIR is used for automatic exit procedures or motion-detectors, while the REX is used for manual exits.

SUPERVISED DOOR SENSE AND REX INPUTS
Sentex Systems recommends installing “supervised” Door Sense and REX inputs. Supervised inputs allow the system to monitor when Door Sense or REX wires have been shorted or cut (see also **Reading the Ten-Segment LED Array** on page 24).

- For installing supervised Door Sense and REX inputs, refer to Figure 12 (page 16) and Figure 13 (page 17).

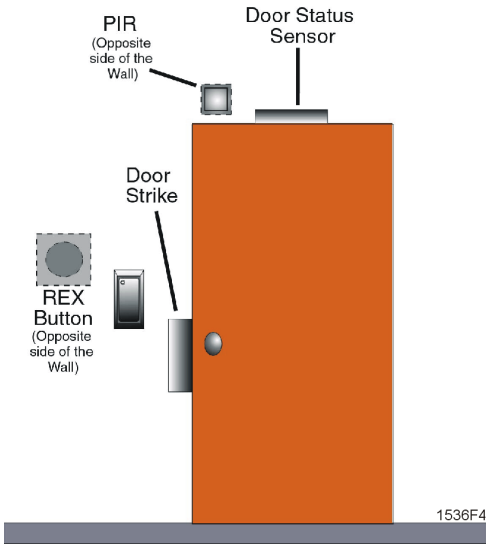

Figure 5: Door Strikes, Status Sensors, PIRs and REXs

Step 4: Installation of the EM3000 System

Before you begin, review the safety guidelines that follow. Installation of your system should take approximately 1-3 hours per access control point (depending on your familiarity).

Grounding

The EM3000 contains parts that may be damaged by static discharge. A proper earth ground connection will significantly reduce the chances of damage or improper operation.

Damage caused by static discharge is not covered by warranty.

To be effective, the ground connection must be made by running 12 AWG shielded copper wire to a good ground point (e.g., an electrical panel, a metallic cold water pipe that runs into the earth, or a grounding rod at least 10 feet in length that is driven into the earth) within 12 feet of the unit.

Ground all shield/drain wires (except RS-485 cables) at the earth ground screw, located within the EMC cabinet (see Figure 6). Ground shield/drain wire of RS-485 cable at the PC (using a case screw).

Even if you have a good earth ground, you should try to discharge any static before handling the circuit boards.

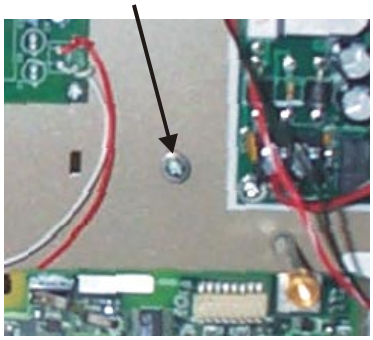

Figure 6: Earth Ground Screw Location

Tips to Ground Yourself

1. Use a grounding strap.
2. Touch a metallic, cold water pipe that runs into the earth.

PROPERLY ROUTING THE CABLES

***Do not* route data and power cables in the same conduit.** Cross-talk and transmission of electrical noise may result. The EMC's printed circuit boards will become damaged if the power cable grounds to the data cable.

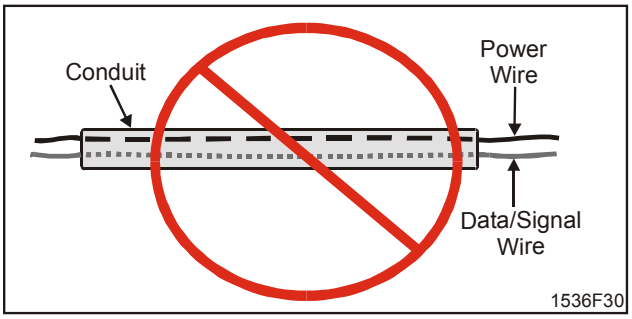

Figure 7: How NOT to route power and data wires

GROUNDING THE 110 VAC POWER LINES

All high voltage grounding and wiring should comply with local, state, and federal regulations, as well as conform to NEC standards. In general, use a third green wire ground with 110 VAC power runs. Ground wire should be appropriately connected to source ground, as well as junction boxes, back-boxes, and enclosures.

GROUNDING READER AND DOOR HARDWARE CABLES

Ground the shield/drain wires from readers, door strikes, door status sensors, and REXs at the earth ground screw, located within the EMC cabinet (see Figure 6).

Procedure:

1. All cables from readers, door strikes, door status sensors, and REXs must be properly earth grounded to ensure stable operation. Use the “Open-ended grounding” technique. This technique means to tape back, or isolate, one end of the shield drain wire and earth ground the other. An example would be to tape back the shield at the reader side and to tie the shield at the EMC side to earth ground (see Figure 10). Please be aware that operation is affected by the amount of static present during certain times of the year.

2. At the reader site, it is important to be aware of both the static generated from electrical grounding from the data and reader cabling, as well as the user site. If at all possible, the reader mounting plate should be attached to a grounded junction box or to another grounded source, if the junction box is non-metallic. This alleviates the possible damage caused by static electricity.

3. If grounding locally is not possible, connect drain wires to provided ESD (Electro Static Discharge) hardware at the unit site (enclosure) or to an earth-grounded conduit. As each reader port is progressively farther away from the ESD hardware location, allow for enough drain line to reach the ESD hardware on the EMC end of the cable. Allow enough strain relief to avoid touching other circuitry or creating excessive tension.

GROUNDING THE RS-485 COMMUNICATIONS CONNECTION

The cable connecting the RS-485 converter (at the PC) to the EMC must have its shield/drain wire grounded to the host PC (at case screw). The other end of the cable’s shield/drain wire must be attached to the EMC board (at SHIELD). For more information, refer to **Connecting the RS-485 Converter (EMC to PC Communication)** on page 20.

Noise Suppression

Sentex has designed its products to withstand most inductive voltage spikes without affect. However, some noise found in power supplies and door strikes, in addition to static discharge, may cause the control unit to momentarily shut down, lock up, or in extreme cases, become damaged. Unexplained lockups and intermittent system behavior are common symptoms of static or noise problems. If cycling power will remedy your problem, carefully follow these instructions:

1. For DC powered door strikes, install a diode (IN4004 or equivalent) at the strike with the positive DC power connected to the cathode (K), or banded, end of the diode (see Figure 8).

   For AC powered door strikes, install an M.O.V. (metal oxide varistor) rated at 50 volts or higher, or Transorb (P6KE15A or equivalent) at each door strike. When installed, they will suppress most problem door strikes.

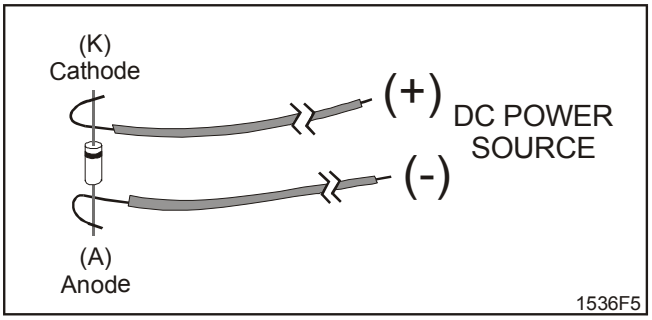

Figure 8: Diode for DC Powered Door Strikes

2. Properly grounding all readers and hardware, in addition to suppressing noise in the peripheral equipment, should allow for many years of problem free use.

3. **In addition, Sentex requires that a separate power supply (appropriate for the type of strikes or maglocks used) be installed to power door strikes.**

4. Before installing the reader, please read the reader wiring instructions in this manual. Damage may occur if this is disregarded.

5. Installation must meet all local, state, and federal regulations and codes for electrical installation. If these codes conflict with the installation methods described in this manual, please call your service representative.

Preparing to Install the EMC and Accessories

1. **Locate a 110 VAC junction box that will be suitable for your EMC installation:**
   The junction box, in most situations, will already be installed from a building's initial installation. The location of the junction box will be a determining factor as to where your installation should take place.

   The junction box must provide constant power, so make sure the box does not have an ON/OFF switch or other means that would shut off power to the EMCs.

   WARNING

   Power to the local junction box must be OFF during the connection between the junction box to the 12 VDC power supply board. *You may need to supply extra lighting to the installation area during the time power is off.*

   Note: If you cannot locate an appropriate junction box to power the EMC, power the system directly from the breaker box.

2. **Determine which breaker in the breaker box powers the 110 VAC junction box:**
   With any high-voltage electrical work, a qualified electrician will need to know which breaker powers the local junction box.

3. **Review and pick out locations to mount your EMC(s):**
   Look for locations that are within 500 ft. of your access control points. Make sure that your locations are also safe from temperature variations, environmental changes, and access from outsiders.

4. **Review reader and door hardware materials for mounting requirement:**
   Will you require special tools when installing your system? When installing a reader, always follow the instructions outlined in the reader's instruction guide(s).

5. **Prep and cut door frames for lock and door sense hardware:**
   In most cases, the doorframes will be metal. You may need to use metal snips and a drill to size and secure the lock hardware and your door sense to both the frame and the door itself. For wooden frames, you may need wood working tools.

6. **Cut out dry wall access points for the door hardware and reader:**
   Where will your readers be located? Make sure that your access points correspond to the locations where you plan to have your hardware. If you are using REXs or PIRs, make sure placement of access points are on the **opposite side of the wall** from the readers.

Installing the EMC Cabinet

1. **Mount the EMC cabinet:**
   Use the existing mounting holes to mark the drill locations onto the mounting surface. Then remove the cabinet and drill holes that will be used to secure the cabinet to the mounting surface. Mount the cabinet using appropriate mounting hardware.

   The location of the EMC cabinet should be near the 110VAC junction box and with easy access to the access control points and their hardware. **The cabinet may only be surface mounted.**

2. **Remove knockouts from the unit:**
   Connections for the EMC enter the cabinet in three areas (though actual installation and entrances may vary).

Door Connections-	Left Entrance
Power Connections-	Upper-Right Entrance
Reader Connections-	Bottom Entrance
RS-485 Connections-	Bottom Entrance

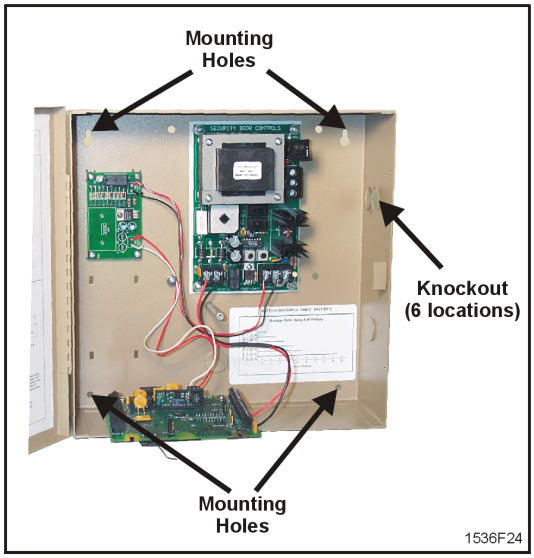

Figure 9: Mounting Holes and Knockouts

You may also wish to mark the entrances around the mounted cabinet to show where connections will be made to the EMC. To simplify the installation process, decide which access control point will be Door 1 and which will be Door 2. This will help you decide where door hardware and reader should be connected first to the EMC.

Installing the Reader and Door Lock

1. **Pull lock/reader wire to the target doors:**
   Run wiring from the EMC to both Doors 1 and 2. Remember that wiring for door hardware and readers differ in both the types of wiring and where wiring is necessary:

Readers:	The EMC monitors and powers the readers. Run a 6-conductor 22-gauge wire from the unit to the target doors.
Door Hardware:	Locks and PIRs are monitored and controlled by the EMC board but powered directly from a separate power supply. When connecting the door hardware, use 2 conductor 18-gauge wire.

2. **At the door and reader locations, pigtail wire out for each lock/reader:**
   Once you've run cable from the EMC to Doors 1 and 2, pull reader wiring through the hole-punch created in the drywall. Repeat the process with wiring from the different door hardware. Make sure you give yourself an extra few feet of wire for room to maneuver when making connections.

3. **Splice reader wires and mount both readers**
   Position the reader at the appropriate mounting position on the doorframe. To comply with the Americans with Disabilities Act (ADA), readers should not be installed higher than 48” from the ground.

   Pull the shielding off both the reader cable and the wiring pigtailed through the drywall. The EMC only requires five wires from the reader to operate. Review the directions that are supplied with the reader, but the following rules usually apply:

PWR	=	red wire
DATA 1	=	white wire
DATA 0	=	green wire
RTN	=	black wire
LAMP	=	✳brown wire

   ✳**Note:** Check the instructions supplied with the reader for LED wiring. LED wire color will vary by reader manufacturer. Also, all LED functionality must comply with ADA requirements (e.g., when the EMC grants access and unlocks a door, the reader’s green LED must remain lit for the duration of the unlock cycle).

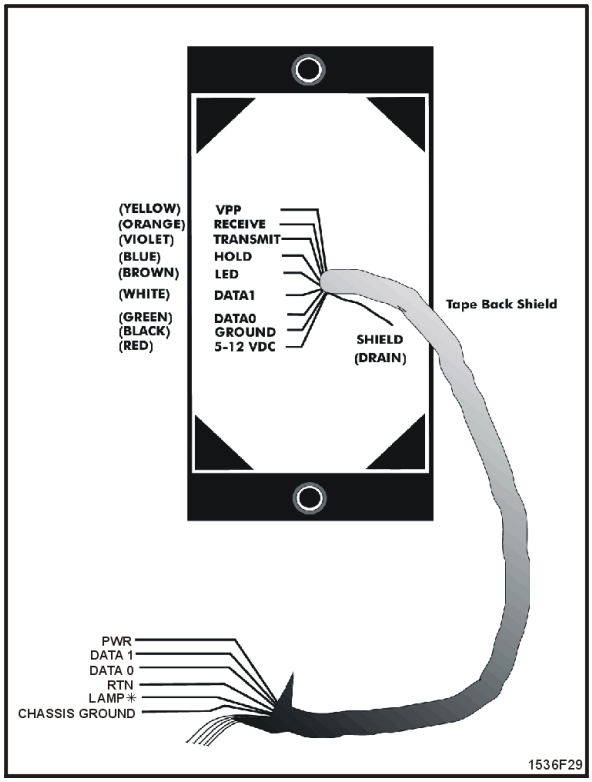

Figure 10: Wiring a Reader

- Splice the wires together and secure using wire nuts or splice caps.
- Be sure to cut back drain wires and tape back along with non-used reader wires (see Figure 10).
- Drain wire (shield) should be connected at earth ground at the EMC (refer to Figure 6 on page 10).
- Position the reader against the wall. Use a level to assure that the reader is mounted straight. Mount the reader to the wall using mounting hardware appropriate to the specific material and type of construction of the wall.

4. **Splice and mount the door hardware:**
   The proper placement and connections for your door hardware depend on the type of equipment being used. Follow the instructions included with the door hardware on the best way to splice and mount your hardware. Remember to install your transorb, diode, or MOV at the door lock location for surge protection.

5. **Wire door hardware to the power supply:**
   Follow the instructions included with the power supply for proper connection of locking hardware.

   Follow the same procedure for the other door components (REX, PIR, etc.) that will be used.

Running Cable to Dedicated PC

Set up the connection that will connect the EMC to its dedicated computer. The EMC communicates to the PC using the RS-485 Converter. Run a shielded cable (such as Belden 1419A) consisting of two (2) twisted pairs (24 AWG) from the EMC to the dedicated PC.

Wiring the EMC

READER WIRING

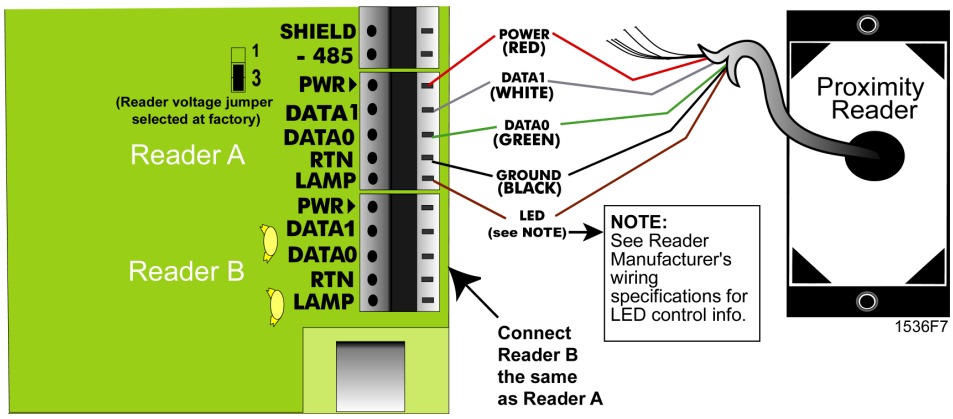

Figure 11: Reader Wiring

CONNECTING THE REX TO THE EMC

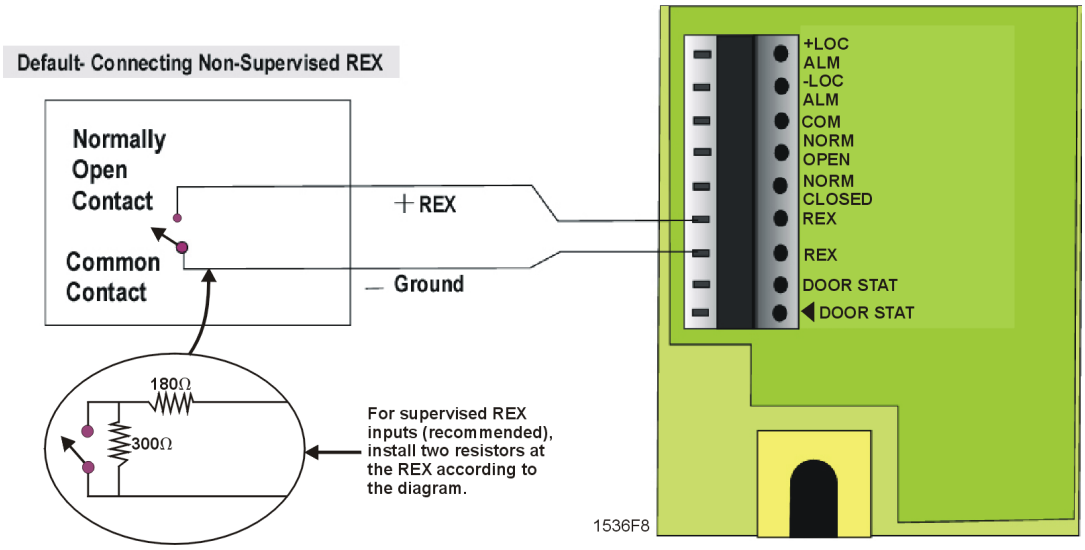

Figure 12: REX Wiring

CONNECTING THE DOOR STATUS SENSOR TO THE EMC

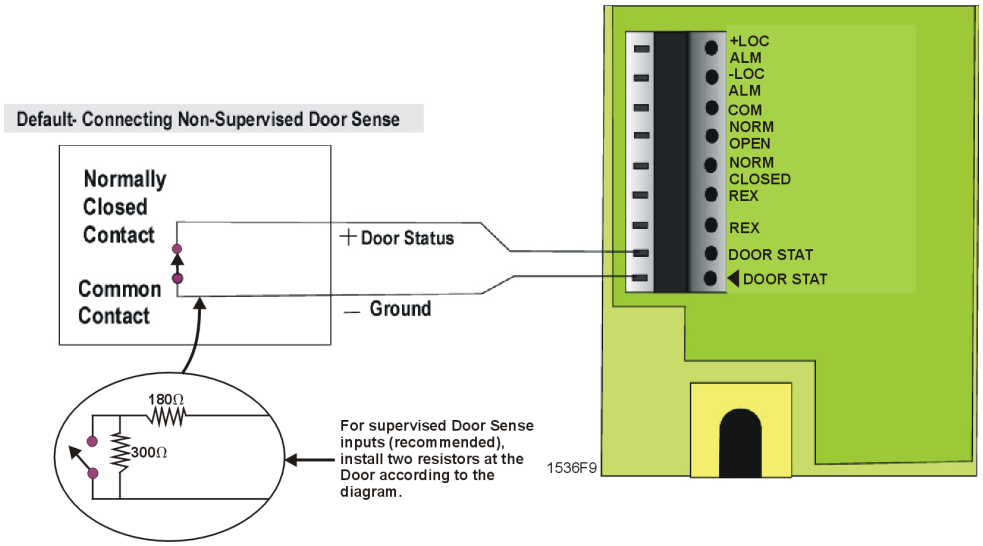

Figure 13: Door Status Sensor Wiring

CONNECTING THE OPEN COLLECTOR OUTPUT

The open collector outputs are designed to drive an external relay. This output is used for door held open and forced door alarm output. The open collector outputs are capable of 100 mA current @ 12VDC.

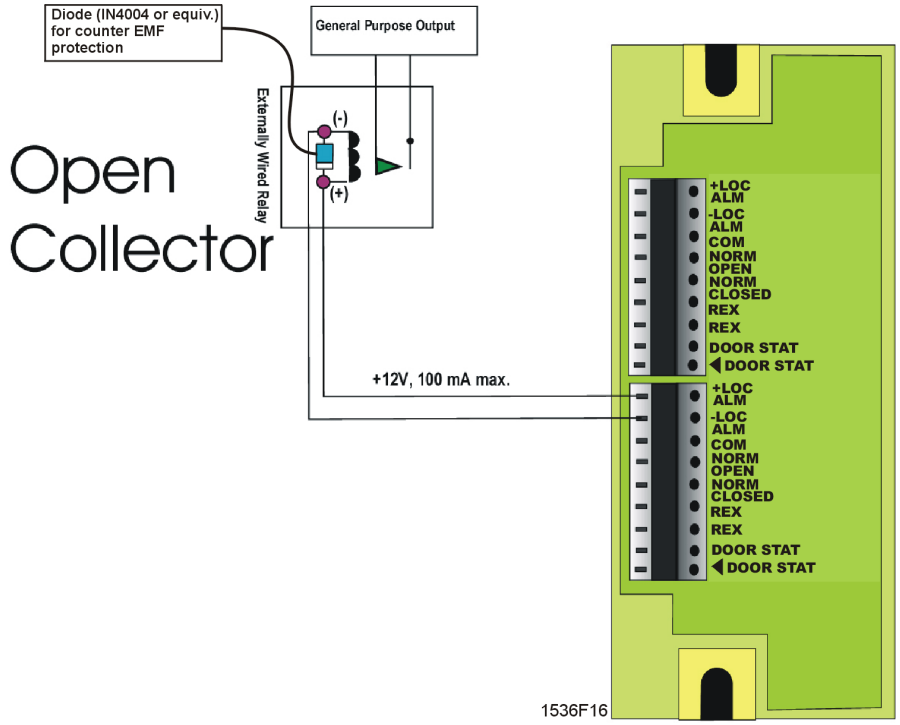

Figure 14: Open Collector Connections

LOCK WIRING

Wiring the door locks will vary on the type of lock (e.g., Door Strike or Maglock) and "environment" you wish to employ: fail-safe or fail-secure.

Fail-safe (e.g., Maglock): If the lock loses power (e.g., from a power failure), the door will unlock.

Fail-secure (e.g., Door Strike): If the lock loses power (e.g., from a power failure), the door will remain locked.

Determine which type of environment to use. Is the access control point an area where people need to exit in case of emergencies? Does the access control area require its doors to lock after a power failure (e.g., to prevent vandalism)?

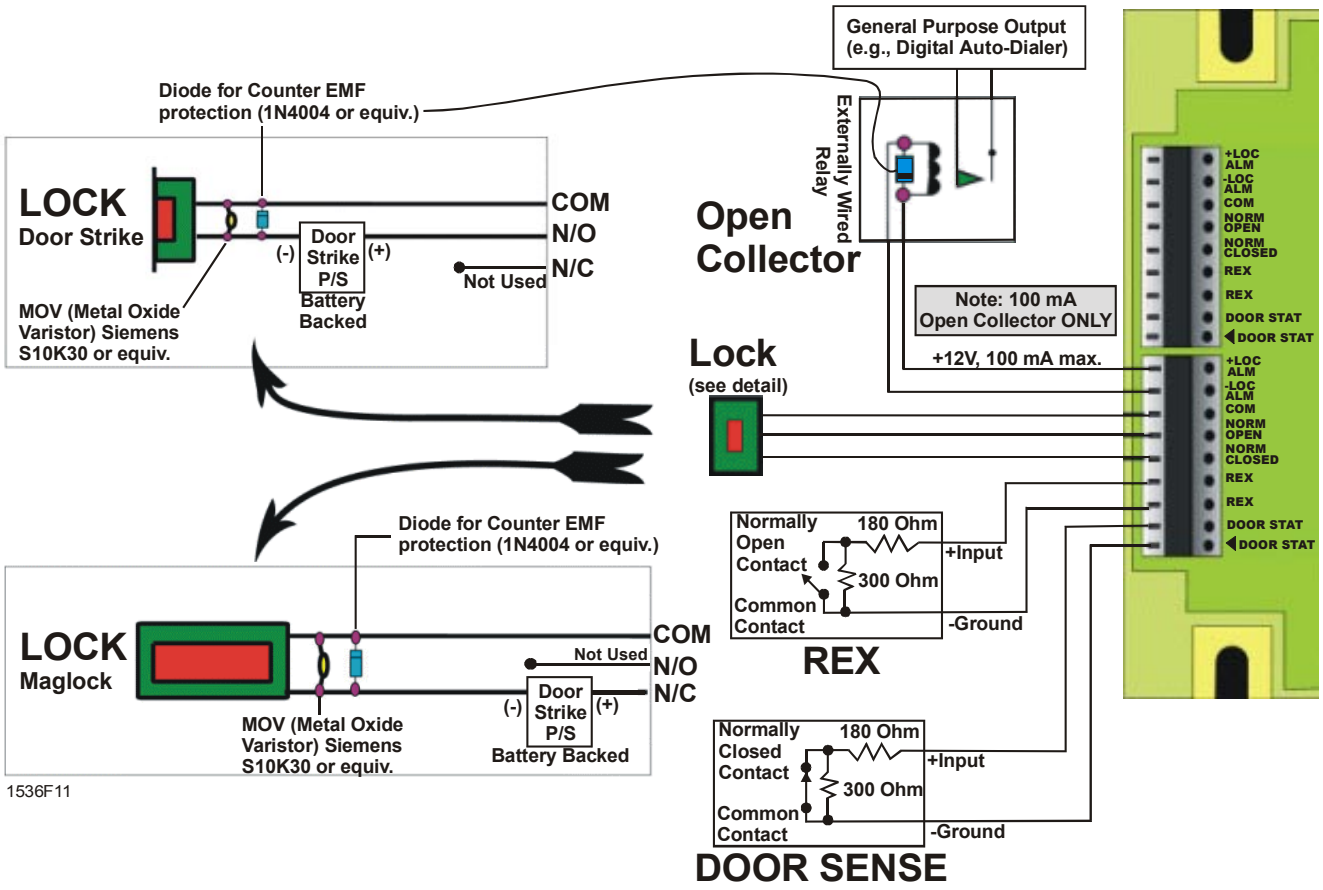

Figure 15: Maglock and Door Strike Wiring

CONNECTING THE DOOR LOCK TO THE EMC BOARD AS "FAIL-SAFE"

Figure 16 is an example of the EMC with a Maglock in a "Fail-Safe" environment:

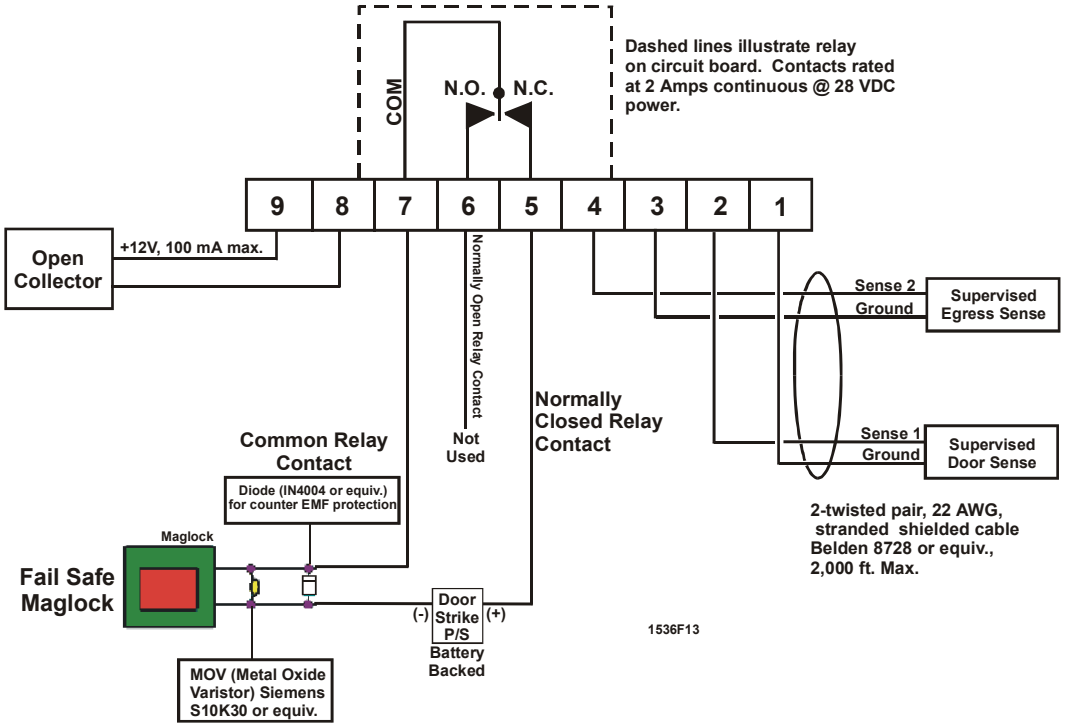

Figure 16: Fail-Safe Connections

CONNECTING THE DOOR LOCK TO THE EMC PANEL AS "FAIL-SECURE"

Figure 17 is an example of the EMC with a Door Strike in a "Fail-Secure" environment:

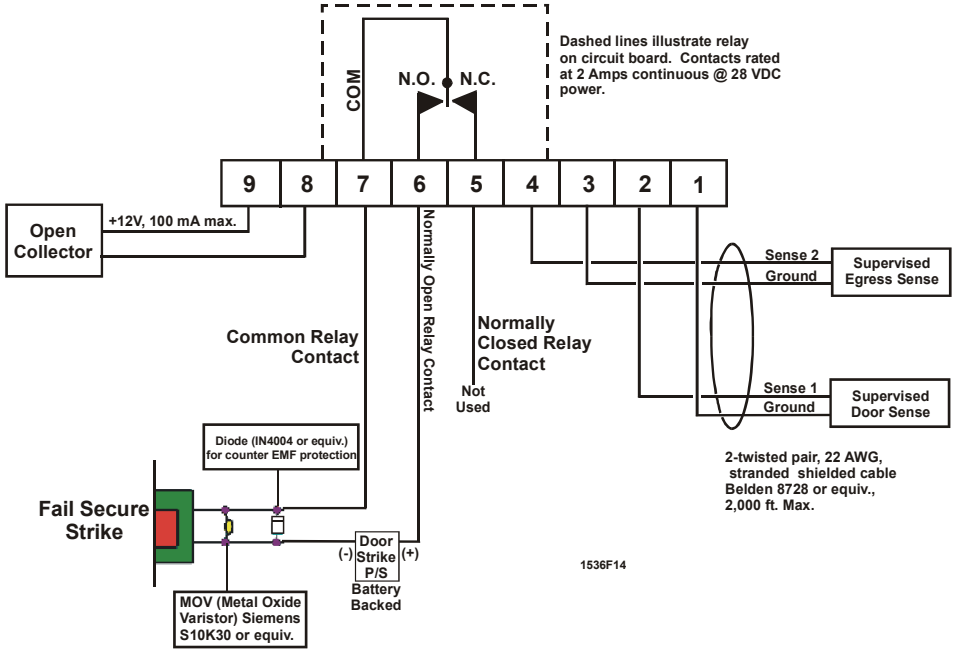

Figure 17:Fail-Secure Connections

CONNECTING THE RS-485 CONVERTER (EMC TO PC COMMUNICATION)

The EMC communicates to the PC using the RS-485 converter. For a multi-EMC system, connect the RS-485 converter to the first EMC in the system.

1. Wire the RS-485 converter to the EMC as shown in Figure 19.
   - One twisted pair will be used for the A- to –485 and B+ to +485 (RS-485 to EMC board) connections.
   - One wire from the other twisted pair will be used for the RTN to COM (RS-485 to EMC board) connection; the other wire of the same twisted pair will not be used.
   - The cable (Belden 1419A or equivalent) must also have a shield wire attached from the host PC (at case screw) to the EMC board (at SHIELD).
2. Plug the converter into any available COM port of the host PC (see Figure 18). Note the COM port number; you will need to assign this number in EMWin.
3. Plug the converter's power transformer into the appropriate power outlet (input @ 120VAC).

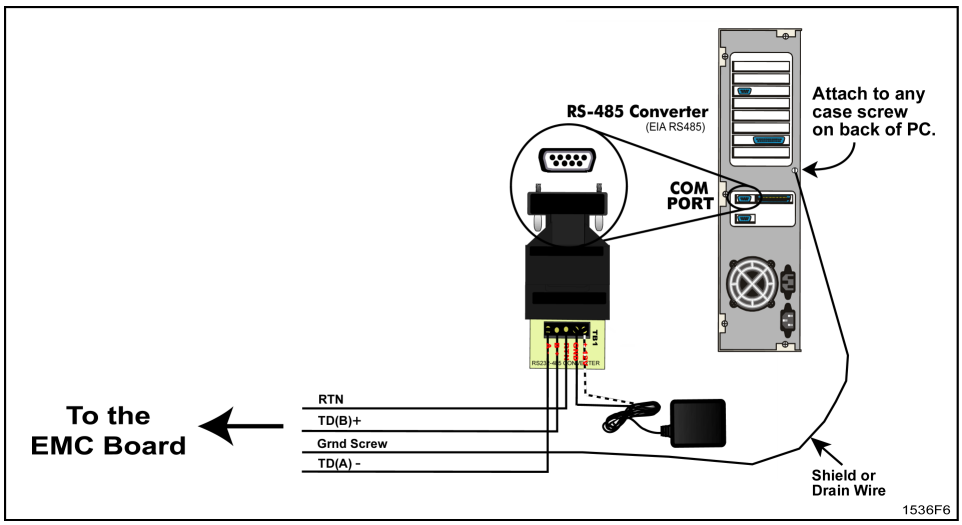

Figure 18: EMC to PC Connection

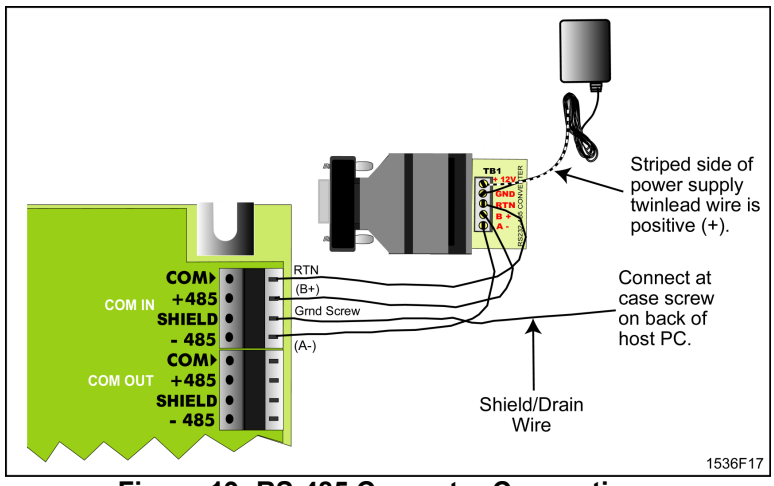

Figure 19: RS-485 Converter Connections

Step 5: Power and Test the EM3000 System

Powering the EMC

1. **Make connections between the 12 VDC power supply board and the 110 VAC junction box** (refer to Figure 20): Remember to switch the local breaker to the off position prior to performing this step of the installation!

WARNING

Do not attempt to connect the 110 VAC junction box to the 12 VDC power supply unless you are a qualified electrician. *All connections from the 110VAC junction box to the 12 VDC power supply should meet National Electrician Code (NEC). High voltage accidents can be fatal to you or others.*

WARNING

Power to the local junction box must be OFF during the connection between the junction box to the 12 VDC power supply board. *You may need to supply extra lighting to the installation area during the time power is off.*

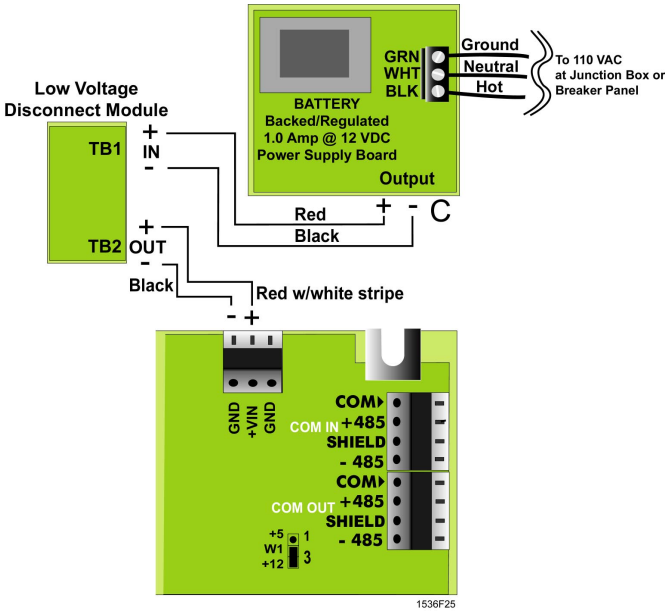

Figure 20: Connecting Power to the EMC

CAUTION

To avoid damaging the EMC and voiding its warranty, do NOT switch the power supply board's power output to 24VDC. *The system runs on 12VDC power only.*

2. **Power the system via the circuit breaker:**
   Once the connection between the junction box and the power supply is secure, power the main system by returning the building circuit breaker to its normal position.

3. The power supply's status LED (see Figure 21) will light with an amber/greenish glow to indicate that 110VAC is present and the supply is operating properly.

Connect Battery Backup

1. **Connect the 12VDC battery to the Power Supply board:**
   Connect the red wire (+) to the positive terminal (+) of the battery (see Figure 21).
   Connect the black wire (-) to the negative terminal (-) of the battery.
   - Red wire to positive (+)
   - Black wire to negative (-)
2. If the power supply's status LED glows red, only the battery is supplying power to the system (110VAC is not present).
3. **Place the battery inside the cabinet in the lower-right corner** (as seen in Figure 22).

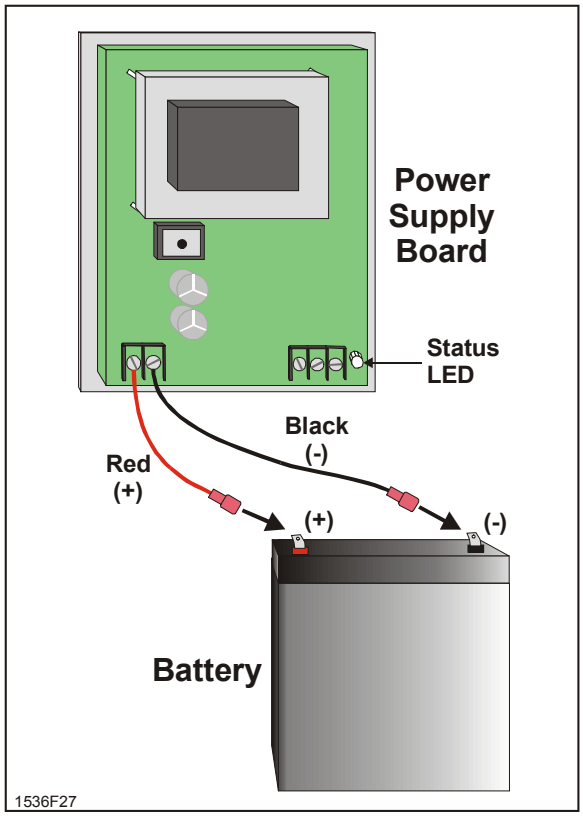

Figure 21: Battery Backup Connections

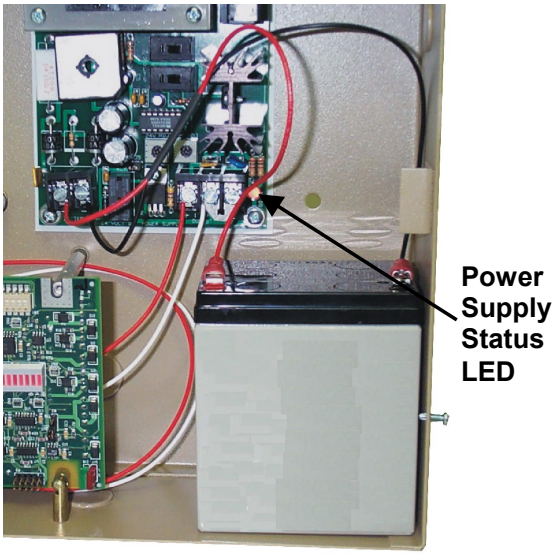

Figure 22: Battery Placement in EMC Cabinet

Testing the EMC System

At this point, all the connections have been completed, the unit's power is ON, and we have not yet started the EMWin software.

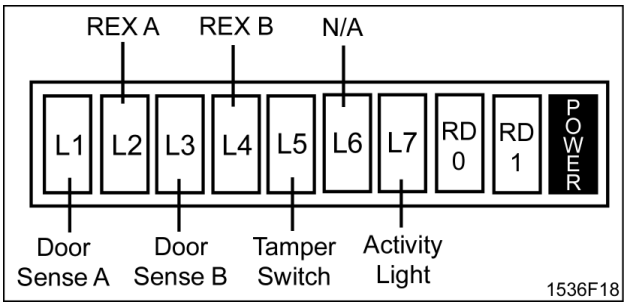

Figure 23: EMC Indicator LEDs

1. **Check that the EMC Red Power Indicator is ON.**

   This is the right-most indicator on the LED array on the front of the board (see Figure 23).

   If the LED does not light, go to Problem 1 of the troubleshooting section (see page 27), under **Possible Problems**.

2. **Press the REX (Request to Exit) button if you have installed one.**

   This should cause the door strike to energize.

   If the door strike doesn't energize, check the wiring connection from the strike to its power supply and to the EMC board. Also check the wiring from the REX to the EMC board.

3. **Perform this set of steps for each EMC you have installed.**

   After completing hookup of the EMC, use the EMWin software to verify all other functions. Refer to the *EMWin User's Guide*.

EMC Power-Up Checklist

- ✓ The EMC Red Power Indicator must be ON (right-most indicator on LED array on front of board, see Figure 23).
- ✓ Press the REX button. The Door Strike should activate. If not, check the wiring connection from the strike to its power supply and to the EMC board. Also check the wiring from the REX to the EMC board.
- ✓ Once all readers and REXs are verified, connect the PC to the System.
- ✓ The Reader(s) Red Activation LED Indicator (RD 0 or RD1) must light when an active card is swiped.
- ✓ If the EMWin software and computer have not been installed, please proceed using the *EMWin User's Guide*.

Reading the Ten-Segment LED Array

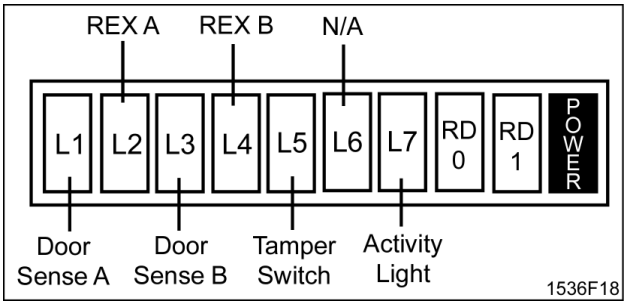

Figure 24: EMC Indicator LEDs

LED STATUS CHART FOR DOOR SENSE AND REX INPUTS

Door Sense and REX LEDs will have a timed blink sequence (last three conditions in table) for use with troubleshooting ***only*** with **supervised** inputs. For more information on supervised inputs, refer to **Supervised Door Sense and REX Inputs** on page 9.

LED CONDITION	STATUS
ON	Circuit is normal/active
OFF	Circuit is normal/inactive
"Slow" – Approx. 2 flashes/second .	Fault condition: Open circuit (cable is cut)
"Moderate" – Approx. 4 flashes/second.	Fault condition: Short circuit (cable is shorted)
"Fast" – Approx. 6-7 flashes/second.	Input is configured for supervision in EMWin software (see Door Properties), but resistors are not installed. Refer to Figure 12 (page 16) and Figure 13 (page 17).

Step 6: Configuring a Multi-EMC System

Communicating with Multiple EMCs (via RS-485)

Once the PC host is connected to one EMC, perform the following steps for each additional unit:

1. Connect each EMC by wiring from P8 from the first EMC board to P7 in the next EMC board. This format can be repeated in up to 32 total units. **The total cable length from the PC to the last EMC in the system must not exceed 4000 feet.**

2. Move the W2 jumper to TOUT for all units except the last one.

   - **Last Unit:** W2 jumper in TIN position.
   - **All Other Units:** WS jumper in TOUT position.

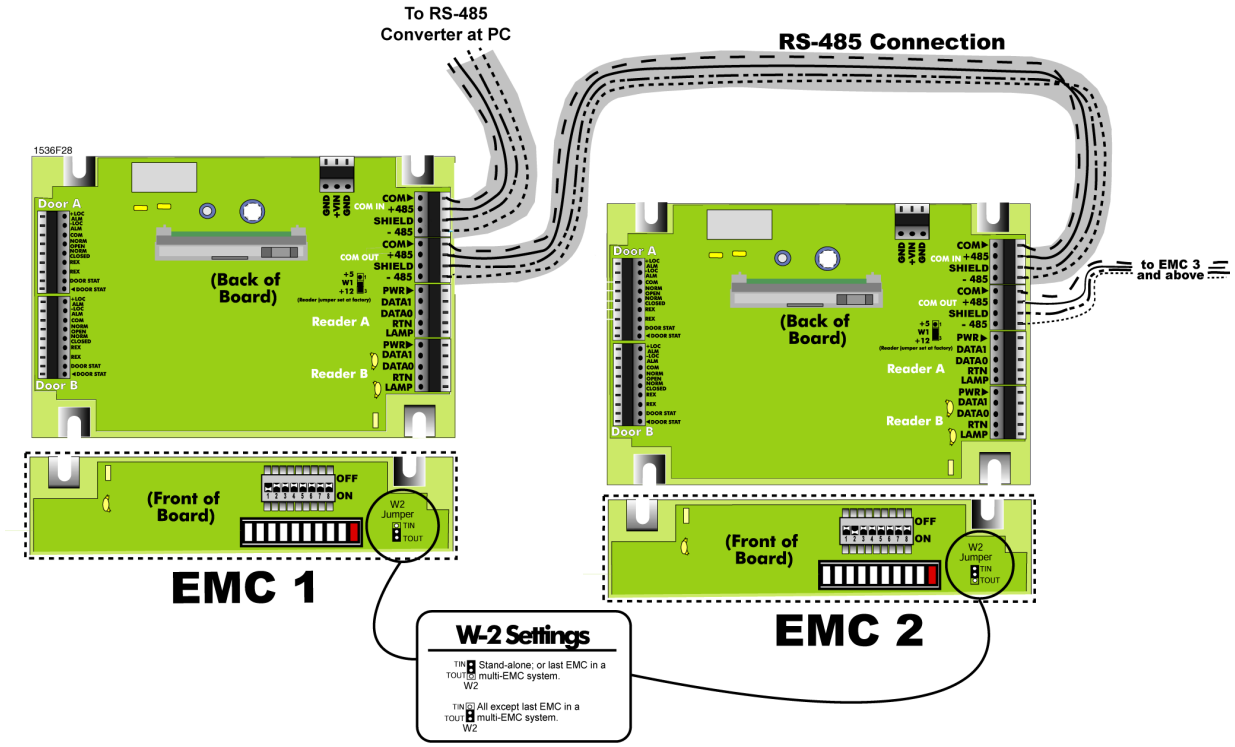

Figure 25: Communicating with Multiple EMCs (via RS-485)

Addressing Each EMC Through the DIP Switch

The EMC communicates over an RS-485 serial direct connection. The address DIP switch (**SW1)** is located at the upper right of the board. Set each EMC DIP switch uniquely in sequential order (from 1 to 32), starting with the first EMC (the one connected to the RS-485 converter at the PC), EMC 1 in Figure 25.

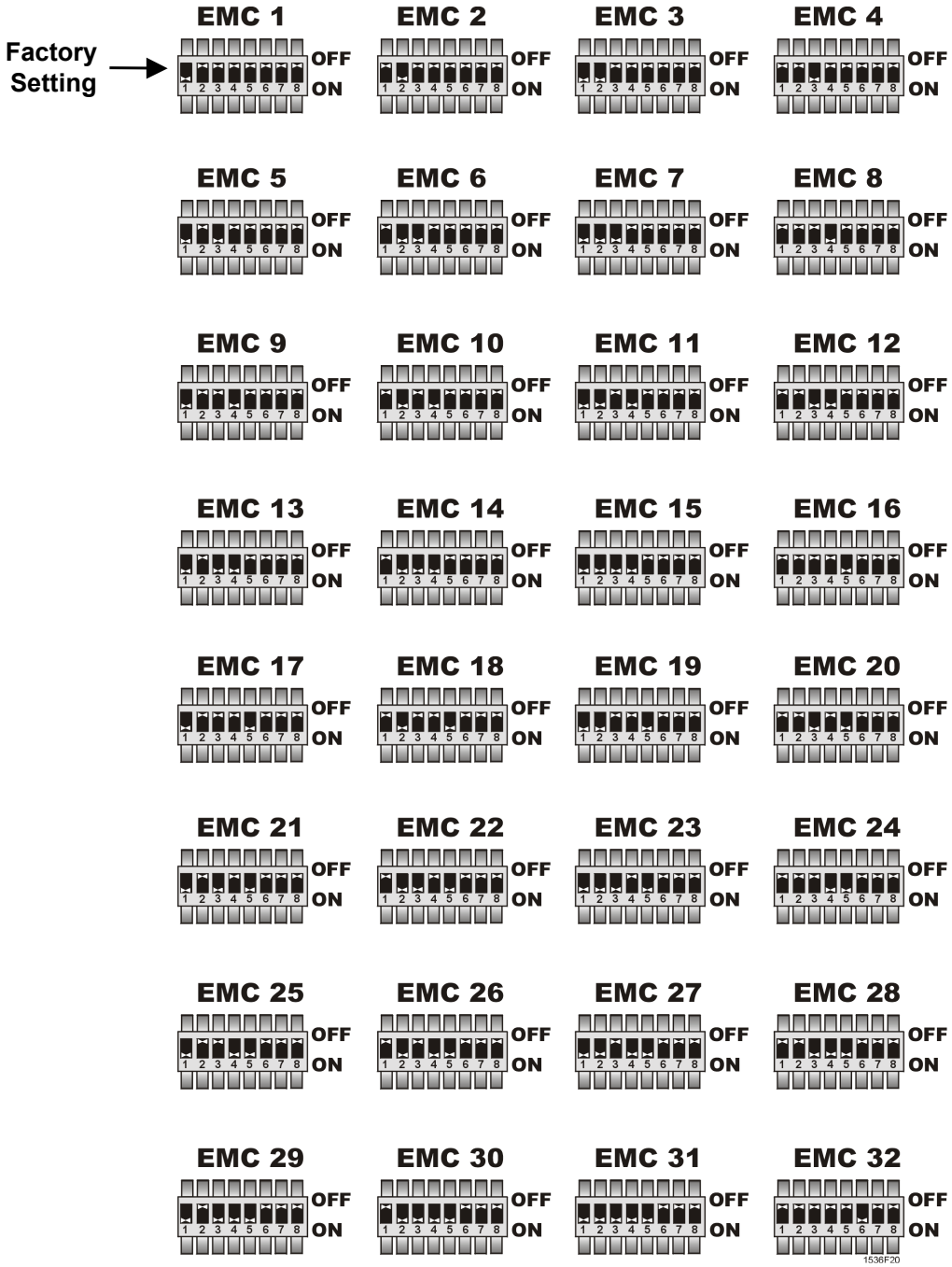

Figure 26: EMC Dip Switches

Step 7: Troubleshooting

Check for these problems first:

1. Faulty Cable connections.

Check the wiring information section, **Wiring the EMC**, starting on page 16.

2. Overloaded Power Supply.

The power supply board inside the EMC is only designed to provide 12VDC (up to 1 amp) to the controller board and two (2) reader devices. It is not intended to supply power to electric door strikes or maglocks; these devices require their own separate, dedicated power sources. Powering electric strikes or maglocks from the EMC power supply board may cause improper operation of, or damage to, the EMC board and/or power supply.

Possible Problems

Problem 1: EMC Power LED indicator is not on.

- ❒ Check power. It could be a defective power supply.
- ❒ Check wiring from power supply to EMC.

  You may have a possible polarity problem. Be sure that the plus (+) lead from the power supply is inserted into the plus (+) power connection point on the EMC board. Likewise, check that the negative (-) power supply is inserted into the ground connection point on the EMC board.

Problem 2: Cards are not being read.

Card reader will 'beep' when successfully read and sent to the EMC.

- ❒ Does the reader 'beep' when the card is presented?
  If not, swipe the card on another reader. If the other reader 'beeps' the card, check the first reader's wiring.

Problem 3A: The EMWin software does not recognize an EMC.

- ❒ Verify that the EMC is powered up; refer to **Step 5: Power and Test the EM3000 System** on page 21.
- ❒ Verify that all EMCs have unique address DIP switch settings and that all are sequentially numbered; refer to Figure 26 on page 26.
- ❒ Verify the RS-485 connections between all EMCs; refer to Figure 18 (page 20) and Figure 25 (page 25).

Problem 3B: Software shows status of all EMCs as red dots meaning there is no connection from the EMC to the PC.

- ❒ Verify that the RS-485 converter is connected to a functional COM port on the host PC; refer to Figure 18 (page 20). Also, EMWin will select COM 1 as its default port; however, if using another port, you must manually designate the COM port in EMWin (refer to the *EMWin User's Guide*).

- ❒ Verify the wiring of the RS-485 Converter; refer to Figure 19 on page 20.
  Check the RS-485 converter's plug-in 12VDC power supply.

- ❒ Verify communication termination (W2 jumpered).
  Is the Receive (Rx) LED (Green) flickering?
  No- A RS-485 converter fault, COM 1 fault, cabling error, or the program is not running. **Note:** The EMWin software should be displaying the controller as a "green" or "yellow" dot at the bottom of the screen.

Frequently Asked Questions Guide

SYMPTOM	CHECK	REFER TO PAGE
No communication between PC and EMC. No communication between EMC and other EMCs.	✓ Check RS-485 wiring.	20 & 25
	✓ Check EMC DIP switch setting.	26
	✓ **In multi-EMC system:** EMCs addressed as EMC #1.	26
	✓ Most common error is DIP Switch is programmed up-side-down.	26
Com1 error: *Port being used.*	✓ Disable all auto-loading background programs (e.g., Palm Pilot or Phone Link).	-
EMC *not* on-line.	✓ Check DIP switch setting for EMC address number.	26
	✓ Check communication wiring; polarity is critical. Com (+) to RS-485 (+)/B; COM (-) to RS-485 (-)/A.	20 & 25
	✓ Re-power EMC.	21
Run Time Error after initial installation.	✓ Close all applications before installing EMWin. Check that no background program is currently running (e.g., COM Links, Palm Pilot, or Phone).	-
	✓ Uninstall through the Control Panel any earlier version of EMWin.	-
	✓ Reinstall EMWin.	-
Power Consumption of EMC	✓ The EMC draws less than .250 amps @ 12VDC.	5, 13, & 21
	✓ All other hardware power consumption must be sized appropriately.	-
Reader Connect/Disconnect Error	✓ Change jumper setting for voltage supplied to readers on jumper W1.	-
	✓ Check reader wiring.	16
	✓ The four <u>unused</u> reader wires cannot short together or ground to shield. Shorting will cause erratic behavior.	-

SYMPTOM	CHECK	REFER TO PAGE
Door Output Rating (Door strike)	✓ 2 amp @ 28VDC maximum PCB rating per door.	18
	✓ Relay is rated for 5 amp contact @ 30VDC or 250VAC. Do not exceed 50% of contact rating.	18
	✓ No internal voltage supplied; terminal hook directly to relay contacts only.	18
No reader LED	✓ Check reader wiring.	16
	✓ The four unused reader wires cannot short together or ground to shield. Shorting will cause erratic behavior.	16
Local Alarm terminal rating	✓ 100 milliamps @ 12VDC.	-
	✓ The Local Alarm Plus (+) terminal supplies 12VDC.	-
	✓ The negative (-) terminal will sink up to 100 milliamps.	-
Manually turning off alarm produces "*Unable to run Command – Door Forced Open*" in Transaction Monitor.	✓ In Config Doors\Door Properties: turn off Contacts Used and Request to Exit Used.	-
Alarm ON	✓ Check Door status wiring.	17
	✓ If termination of EMWin occurs during download: Turn Alarm ON then Turn Alarm OFF.	-
Configure Door Description does not match *Door Names*	✓ In *Config. Wizard*, re-assign doors after *Door Name* change.	-
EMWin windows open in odd sizes.	✓ Set *Default Windows Sizes*: Size odd window to desired size and in top menu run \Database\Organize Database.	-
Daylight Saving Time did not automatically update.	✓ *After* Daylight Saving Time changes, download data to the EMC. EMC time is not adjusted until a download.	-
Reader LED ON but door does not unlock.	✓ Check Reader Configuration. At \Host\Config.Door\Readers, check that reader controls the correct door. **Note:** Two readers can be attached to a single door. This flexibility is for Entry/Exit.	-

System Error Messages

While using the EMWin software, you may encounter the following error messages. Refer also to the *EMWin User's Guide*.

INVALID FACILITY CODE
Facility code of EM3000 does not match that of the card. The card is not valid for this system.

CARD NOT ACTIVE
The "Card Active" box has not been selected for the cardholder.

EXPIRED CARD
The card has expired (refer to the "Expiration Date" box in the Card Manager screen. To activate the card, set the expired date to a future date.

INVALID CARD
The card in question has not been activated or is not in the database. Add this card to the system.

INVALID TIME USE
Cardholder has presented their card outside of the scheduled "Time Period." Select another Access Level that has the desired time schedule.

INVALID DAY USE
The Cardholder has tried to gain entry during an invalid day.
Select the appropriate Access Level that best suits their schedule.

INVALID CARD READER
The Cardholder has presented card to a reader that has not been defined for use. Select the appropriate Access Level that best suits their schedule.

ENTRY / EXIT ERROR
Cardholder has not followed the Entry/Exit rules. Entry/Exit selection may be disabled for the cardholder.

CARD READER ERROR
The system did not recognize the card format or the data within the card.

Glossary of Terms

Address- Each EMC in a multi-unit configuration must be assigned a unique number via its Address DIP switch (SW1). Similar to a street address for homes, the EMC number is the address unit. In the EMWin, the first EMC is addressed as unit 1.

Diode- A semi-conductor “one way valve” that is used to protect the EMC from power transients caused by D.C. operated door strikes or maglocks. The diode needs to be installed at the strike or maglock. The diode is polarized, so care must be taken to ensure that it is installed correctly. Refer to Figure 15 through Figure 17 on pages 18 and 19.

Door Left Open Too Long- Door is left open beyond the Door Access Time after a valid opening by card or REX. A Door Status Contact must be installed for reporting this condition.

Door Forced Open- Door is illegally opened without card or REX. A Door Status Contact must be installed for reporting this condition.

Door Status Contact- Usually a magnetic contact device (N.C.) used to provide the status of the door (e.g., closed or open).

Normally Open (N.O.)- A device is considered N.O. if the “normal” condition of the circuit is not completed or in the “open” state. For N.O. push buttons, pushing the button completes or “Closes” the circuit. For N.O. Door Strikes, the N.O. condition will “lock” the door. When the circuit is closed, the door will unlock.

Normally Closed (N.C.)- A device is considered N.C. if the “normal” condition of the circuit is completed or in the “Closed” state. For alarm devices, the “normal” condition is the completed or closed circuit. When the circuit is open, it can become an alarm. For N.C. Door Strikes, the N.C. state is that the strike will remain locked. The lock will unlock in the N.O. state.

PIR- Passive InfraRed detector- A device to detect body heat and produce a N.O. and/or N.C. output. Used for automatic exit devices and motion detectors. Requires an external power source (available in 12 VDC or 24 VDC).

REX- Request to Exit- A device used to provide exit out of a protected door without causing an alarm. A REX device for EMC must be a N.O. device.

Transorb- A device that protects the EMC from power transients potentially caused by static or some door strikes. The EMC is built with transorbs for added protection; however, transients from a door strike need to be stopped at the strike itself. The supplied transorbs need to be installed at the door strike.

FOR TECHNICAL SUPPORT OR TO ORDER REPLACEMENT PARTS

Call our toll free number:

(800) 528-2806

Installation and service information is available six days a week (Monday-Saturday).